ROHS

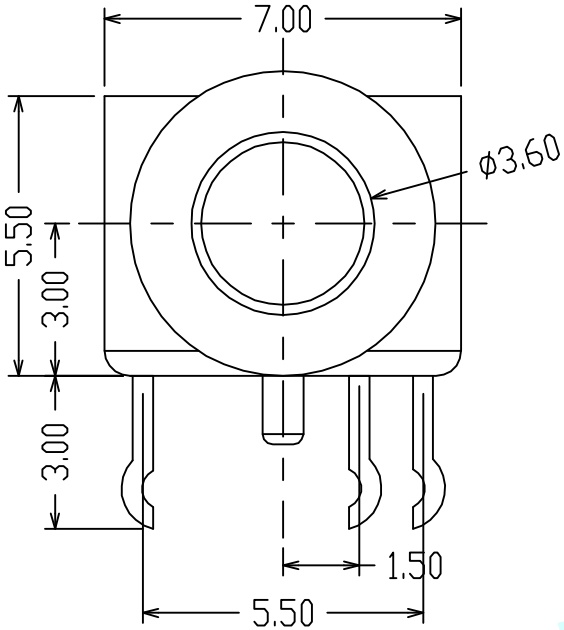

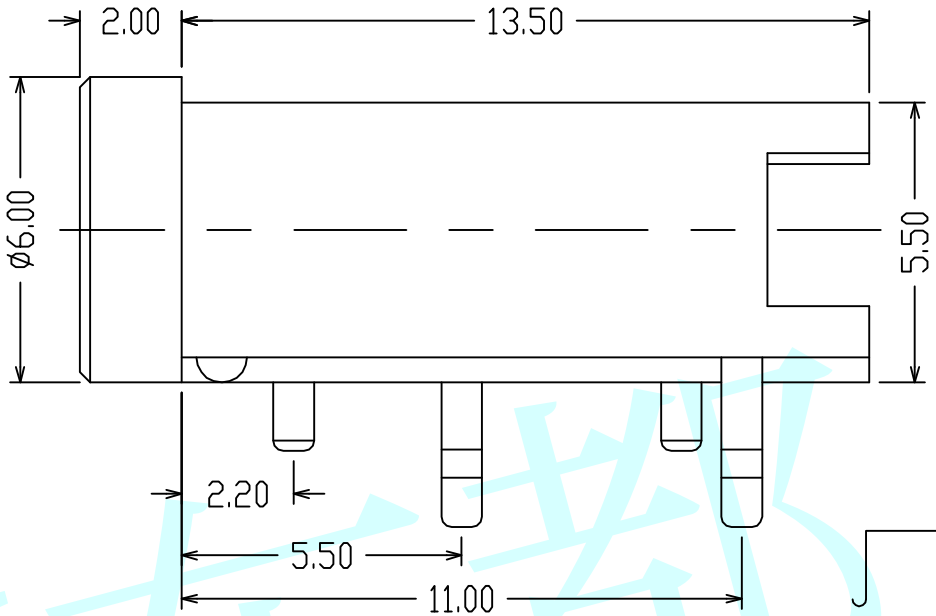

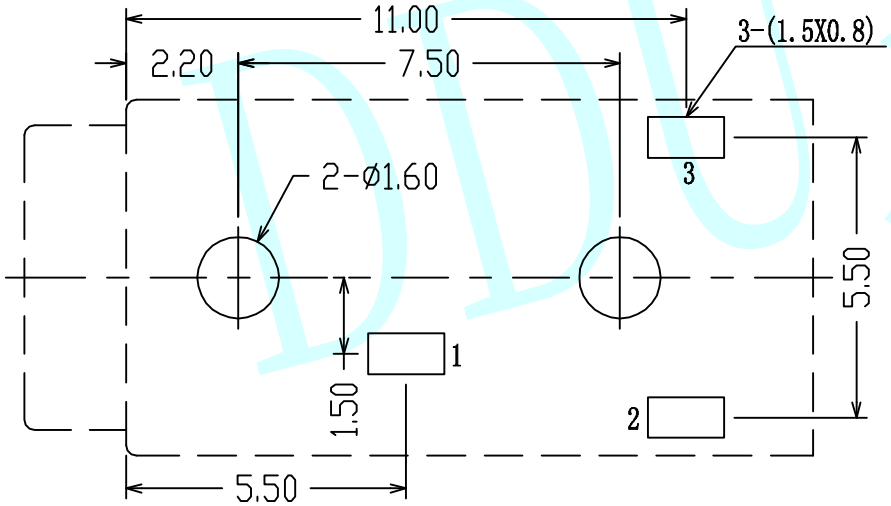

PCB Layout (Copper-Sided View)

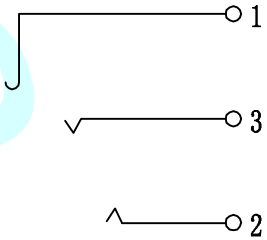

Schematic

NOTES:

1. Rating :0.5A 30V DC
2. Contact Resistance :100mΩ Max
3. Operating Temperature:-20℃~+70℃
4. Operating Force:3-20N
5. Operating Life:5,000 Cycles

APPROVALS		DATE	http://www.dongdudz.com		
DRAW:	ZRD	2017-12-6	TOLERANCE:		ANGLE:
CHECKED:	***	****	30≥	±0.30	±2°
APPOVALS:	***	****	10~30	±0.20	
			5~10	±0.15	
			≤5	±0.10	

® 东都电子
DONGDU ELECTRONICS

MODEL:	PHONE JACKES	
PART NO:	PJ-228	
UNIT :mm	SCALE:1:1	
REV:	A	PAGE:1/1

DDU东都